HB stepper motor

R35BYG

Technical parameter

Step Angle---------- 1.8deg

Ambient Temperature------- -25～+40℃

Temperature Rise---------- 85K

Insulation Resistance------- 500V DC 100MΩ MIN

Insulation Class---------- E

Model	Voltage	Current	Rwauar BXW	Inductance	Deflexion moment	Detent torque
	V	A	Ω	MH	g.cm	G.cm
R35BYG001	12	0.25	45±10%	13±20%	350	150
R35BYG001-04	12	0.25	45±10%	13±20%	350	150
R35BYG002	3.2	0.8	4.8±10%	3.0±20%	500	150
R35BYG003-01	12	0.19	65±10%	—	600	150
R35BYG004	3.2	1.5	1.6±10%	—	900	150
R35BYG005	12	0.5	20±10%	—	1000	150
R35BYG005-02	12	0.5	20±10%	—	1000	150
R35BYG006	3.2	1.5	1.6±1%	—	900	150
R35BYG007	15	0.4	26±10%	—	700	100
R35BYG008	24	1.6	1.3±10%	1.0±20%	900	120
R35BYG401	3.8	1	4.3±10%	—	1300	180

Model	Orientation Inertia	Weight	Wire diagram	Figure		
	$G.cm^2$	kg		L	L1	L2
R35BYG001	10	0.15	b	26	18±1	80±5
R35BYG001-04	10	0.15	b	26	20±1	300
R35BYG002	10	0.15	a	26	20±1	300
R35BYG003-01	10	0.15	a	26	20±1	300
R35BYG004	10	0.15	a	26	17±0.5	300
R35BYG005	12	0.17	a	26	20±1	300
R35BYG005-02	12	0.17	a	26	17±1	300
R35BYG006	10	0.15	a	26		300
R35BYG007	12	0.17	b	26	21±1	80
R35BYG008	10	0.15	a	29	21±1	300
R35BYG401		0.17	a	34	21±1	350

R39BYG

Technical parameter

Step Angle---------- 1.8deg

Ambient Temperature------- -25～+40℃

Temperature Rise---------- 85K

Insulation Resistance------- 500V DC 100MΩ MIN

Insulation Class---------- -B

Model	Voltage	Current	Rwauar BXW	Inductance	Deflexion moment	Detent torque
	V	A	Ω	MH	g.cm	G.cm
R39BYG001	5	1	5.0±10%		1800	150
R39BYG101	2.72	0.04	6.8±10%	6.5±20%	558	150
R39BYG101-05	2.72	0.4	6.8±10%	7.5±20%	650	150
R39BYG102	12	0.48	25±10%	26±20%	1000	150
R39BYG102-09	11.52	0.48	24±10%	26±20%	1000	150
R39BYG201	9.6	0.48	20±10%	—	1000	200
R39BYG202	5.12	0.32	16±10%	—	800	200
R39BYG401	14	0.4	26±10%	—	2300	150
R39BYG401A	2.72	0.4	35±10%	40±20%	2300	150
R39BYG407B	1.82	1.4	1.3±10%	0.7±20%	1150	150
R39BYG504B	6	0.6	7.5±10%	6.0±20%	1500	180

Model	Orientation Inertia	Weight	Wire diagram	Figure		
	$G.cm^2$	kg		L	L1	L2
R39BYG001		0.15	b	34	24±1	300
R39BYG101	11	0.12	b	20	19±1	1200 Socket
R39BYG101-05	11	0.12	a	20	12±1	1200 Socket
R39BYG102	11	0.12	a	20	18±1	1200 Socket
R39BYG102-09	11	0.12	a	20	21.4±1	1000 Socket
R39BYG201	15	0.2	a	25	5	120
R39BYG202	15	0.2	a	25	13±1	800
R39BYG401	11	0.2	a	34	24±1	1200
R39BYG401A	11	0.15	b	26	10±1	400 Socket
R39BYG407B	20	0.2	a	34	18±1 7±1	380
R39BYG504B	24	0.2	a	38	20±1	308 Socket

R42BYG

Technical parameter

Step Angle---------- -1.8deg

Ambient Temperature------- -25～+40℃

Temperature Rise---------- 85K

Insulation Resistance------- 500V DC 100MΩ MIN

Insulation Class---------- B

Model	Voltage	Current	RwararBXW	Inductance	Holding torque	Detent torque
	(V)	(A)	(Ω)	(mh)	(g.cm)	(g.cm)
R42BYG014	8.5	0.45	19	13	1300	< 150
R42BYG015	12	0.4	40	18	1250	< 150
R42BYG016	12	0.16	75	40	900	< 150
R42BYG017	6.3	0.42	15	16	1400	< 150
R42BYG228	12	0.4	40	22	2000	< 200
R42BYG304	12	0.3	40	80	2800	< 200
R42BYG401	6	0.8	7.5	2.2	2300	< 280

Model	Rotor Inetia	Weight	Wire diagram	Figure		
				L	L1	L2
	($g.cm^2$)	(kg)				
R42BYG014	20	0.2	b	34	24	200
R42BYG015	20	0.2	b	34	16	500
R42BYG016	20	0.2	d	34	17	400
R42BYG017	20	0.2	a	34	13	500
R42BYG228	22	0.24	f	38	24	480
R42BYG304	30	0.26	c	44	20	200
R42BYG401	36	0.29	b	48	13.5	110

R42BYG

Outline dimension(mm)

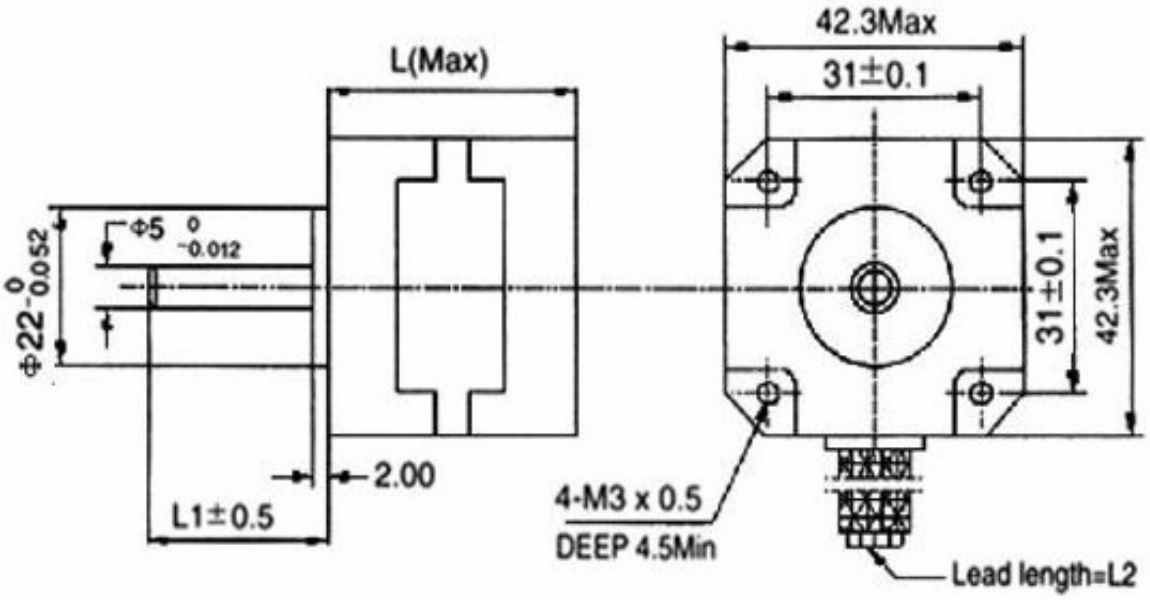

Wiring Diagram

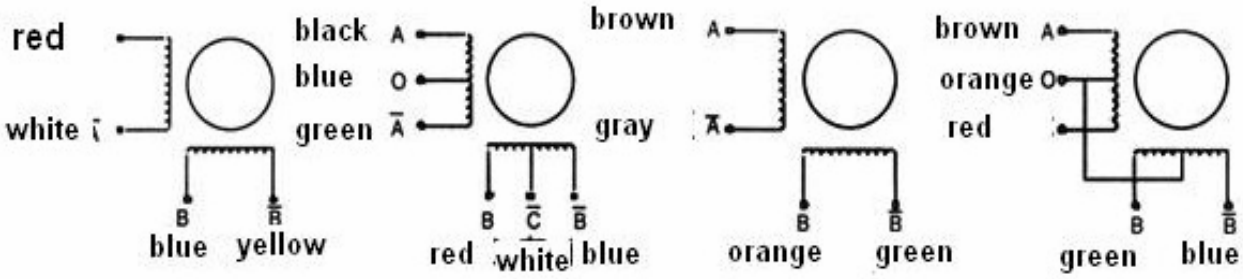

R42BYGH

Technical parameter

Step Angle---------- -1.8deg

Ambient Temperature------- -25～+40℃

Temperature Rise---------- 85K

Insulation Resistance------- 500V DC 100MΩ MIN

Insulation Class---------- B

Model	Voltage	Current	RwararBXW	Inductance	Holding torque	Detent torque
	(V)	(A)	(Ω)	(mh)	(g.cm)	(g.cm)
R42BYGH001	2	0.95	2.1	2.3	1700	< 200
R42BYGH010	2	1.5	1.1	1.8	1500	< 200
R42BYGH023	12	0.4	30	32	2500	< 200
R42BYGH101	2.5	1.7	1.5	3.2	4200	< 220
R42BYGH102	3.6	1.2	3	3.2	3000	< 220
R42BYGH107	12	0.4	30	25	2800	< 220
R42BYGH403	2	2.4	1	1.8	4800	< 250
R42BYGH404	12	0.4	30	25	3200	< 250

Model	Rotor Inetia	Weight	Wire diagram	Figure		
				L	L1	L2
	($g.cm^2$)	(kg)				
R42BYGH001	24	0.2	e	34	24	105
R42BYGH010	24	0.2	h	34	24	610
R42BYGH023	24	0.2	g	34	17	1200
R42BYGH101	32	0.24	h	40	24	300
R42BYGH102	32	0.24	b	40	24	300
R42BYGH107	32	0.24	b	40	24	300
R42BYGH403	40	0.29	h	48	24	300
R42BYGH404	40	0.29	b	48	24	600

R42BYGH

Outline dimension(mm)

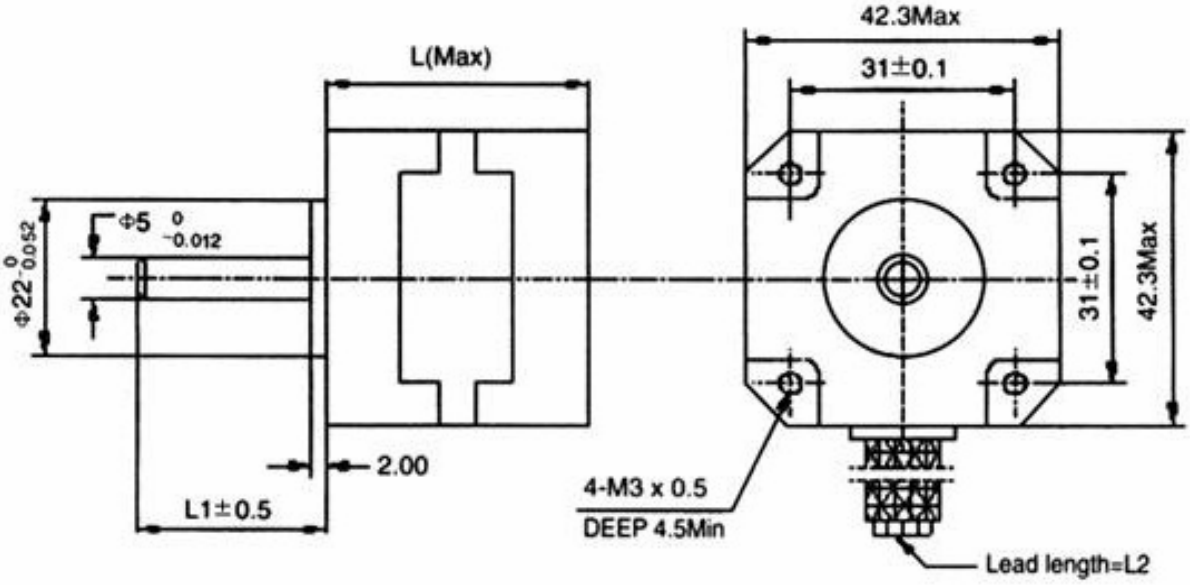

Wiring Diagram

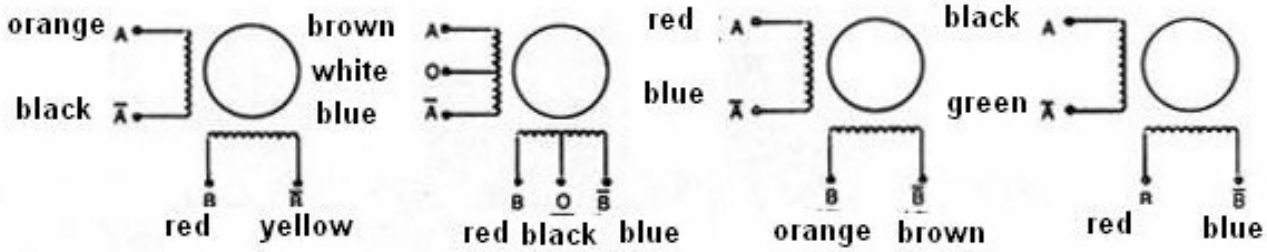

R57BYG

Technical parameter

Step Angle---------- -1.8deg

Ambient Temperature------- -25～+40℃

Insulation Class---------- B

Model	Voltage	Current	Res.	Induct	H.T	Length	Wire diagrarn	Rotor Inetia	Weight
	(V)	(A)	(Ω)	(mh)	(N.cm)	(mm)		($g.cm^2$)	(kg)
R57BYG007	12	0.38	32	30	29.4	41	A	60	0.45
R57BYG008	4	1.3	3.1	4.4	49	51	A	118	0.6
R57BYG009	2.4	2.4	1	1.5	58.8	56	A	145	0.65
R57BYG060	2.6	2	1.3	3	61	51	B	118	0.6
R57BYG061	6	0.5	12	24	35	41	C	60	0.45
R57BYG096	2.7	3	0.9	1.3	85	56	C	145	0.65
R57BYG070	5.4	1.5	3.6	6	88	76	A	230	1
R57BYG707	4.1	2.3	1.8	6.5	140	76	C	230	1

Outline dimension(mm)

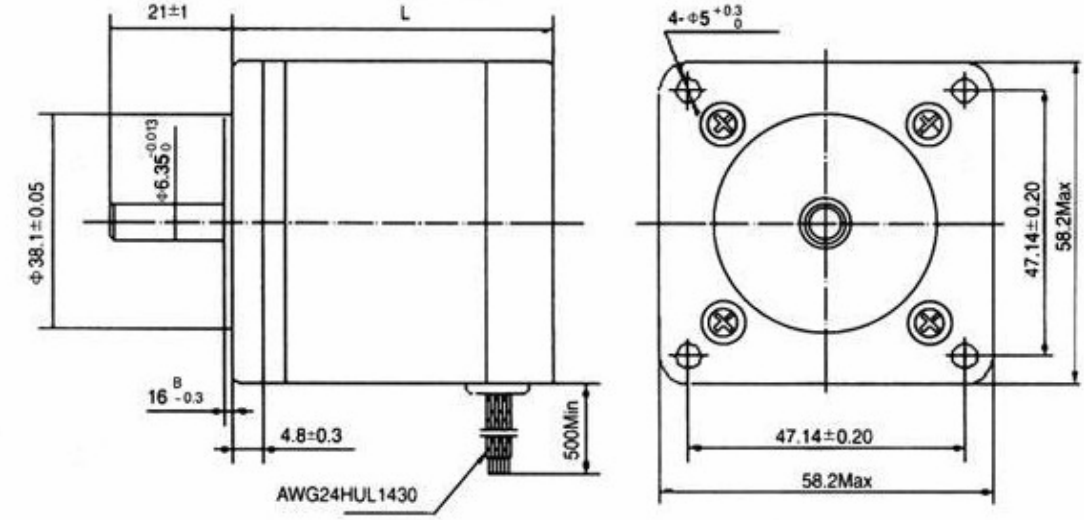

WIRING DIAGRAM

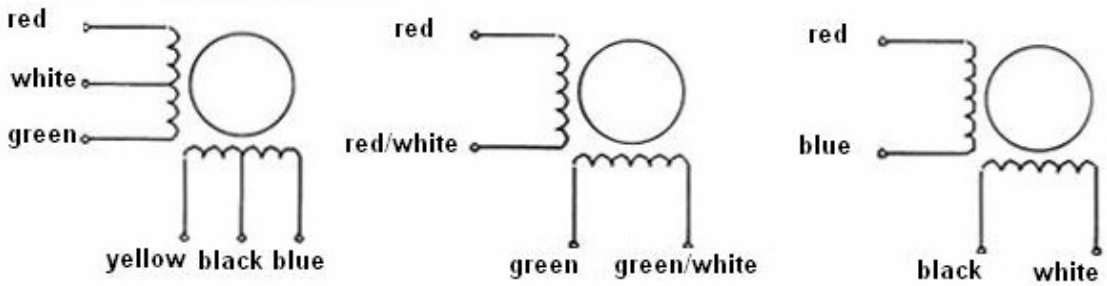

R57BYGH

Technical parameter

Step Angle---------- -1.8deg

Ambient Temperature------- -25～+40℃

Insulation Class---------- B

Model	Voltage	Current	Res.	H.T	Length	Rotor Inetia	Weight
	(V)	(A)	(Ω)	(N.cm)	(mm)	($g.cm^2$)	(kg)
R57BYGH001	5	1	5	39	41	120	0.5
R57BYGH801	3.3	1.5	2.2	55	51	150	0.6
R57BYGH802	4.8	1.5	3.2	80	56	280	0.7
R57BYGH803	6.3	1.5	4.2	140	76	440	1.1

Outline dimension(mm)

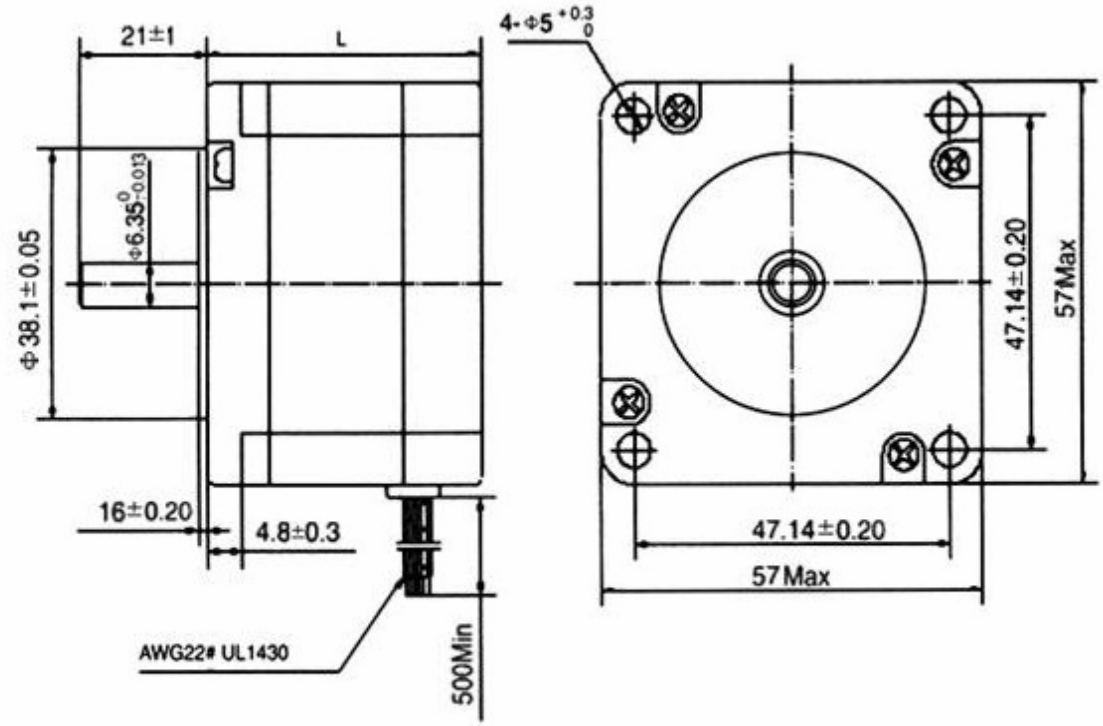

WIRING DIAGRAM