VR stepper motor

28, 36, 45, 55BF

Model	No.of Phase	Step Angle	Voltage	Current	Holding Torque
		(Deg.)	（V）	(A/phase)	Nm(kg.cm)
R28BF001	3	3/6	27	0.8	0.017(0.18)
R36BF002-Ⅱ	3	3/6	27	0.6	0.049(0.5)
R36BF003	3	1.5/3	27	1.5	0.078(0.8)
R45BF003-Ⅱ	3	1.5/3	60	2	0.196(2)
R45BF005-Ⅱ	3	1.5/3	27	2.5	0.196(2)
R45BF005-Ⅲ	3	1.5/3	27	2.5	0.0989(1)
R45BF008	3	1.5/3	24	0.2	0.118(1.2)
R45BC340C	3	1.5/3	12	0.4	0.118(1.2)
R55BF001	3	7.5/15	27	2.5	0.372(3.8)
R55BF003	3	1.5/3	27	3	0.666(7)
R55BF004	3	1.5/3	27	3	0.49(5)
R55BF004-Ⅱ	3	1.5/3	30	0.5	0.49(5)
R55BF009	4	0.9/1.8	27	3	0.784(8)

Model	No-load Pull-In Frequency	Pull-out Frequency	Wdg	Notes
	(Hz)	(Hz)		
R28BF001	1800		1	
R36BF002-Ⅱ	1900		1	
R36BF003	3100		1	
R45BF003-Ⅱ	3700	12000	1	
R45BF005-Ⅱ	3000		1	For double-shaft
R45BF005-Ⅲ	2900		1	
R45BF008	500		1	
R45BC340C	500		1	
R55BF001	750		1	
R55BF003	1800		1	For double-shaft
R55BF004	2200		1	For double-shaft
R55BF004-Ⅱ	550		1	
R55BF009	2500		2	For double-shaft

Model	ΦD	ΦD1	h	Φd	E	L	ΦD2	MS
R28BF001	18 +0/-0.011	18	1.5	3 -0.008/-0.018	11.5	30	22	4-M2.5
R36BF002Ⅱ	22 +0/-0.014	22	2.5	4 -0.01/0.022	14.5	41	27	4-M3
R36BF003	22 +0/-0.014	22	2.5	4 -0.01/0.022	14.5	41	27	4-M3
R45BF003Ⅱ	25 +0/-0.017	25	2.5	4 -0.01/0.022	14.5	82	33	4-M3
R45BF005-Ⅱ	25 +0/-0.017	25	2.5	4 -0.01/0.022	14.5	58	33	4-M3
R45BF005-Ⅲ	25 +0/-0.017	25	2.5	5 -0.01/0.022	14.5	56	33	4-M3
R45BF008	25 +0/-0.017	25	2.5	4 -0.01/0.022	14.5	58	33	4-M3
R45BC340C	25 +0/-0.017	25	2.5	4 -0.01/0.022	14.5	58	33	4-M3
R55BF001	32 +0/-0.017	32	2.5	6 -0.01/0.022	20.5	70	40	4-M3
R55BF003	32 +0/-0.017	32	2.5	6 -0.01/0.022	20.5	70	40	4-M3
R55BF004Ⅱ	32 +0/-0.017	32	2.5	6 -0.01/0.022	20.5	60	40	4-M3
R55BF004	32 +0/-0.017	32	2.5	6 -0.01/0.022	20.5	60	40	4-M3
R55BF009	32 +0/-0.017	32	2.5	6 -0.01/0.022	20.5	70	40	4-M3

接线图 Wiring Diagram

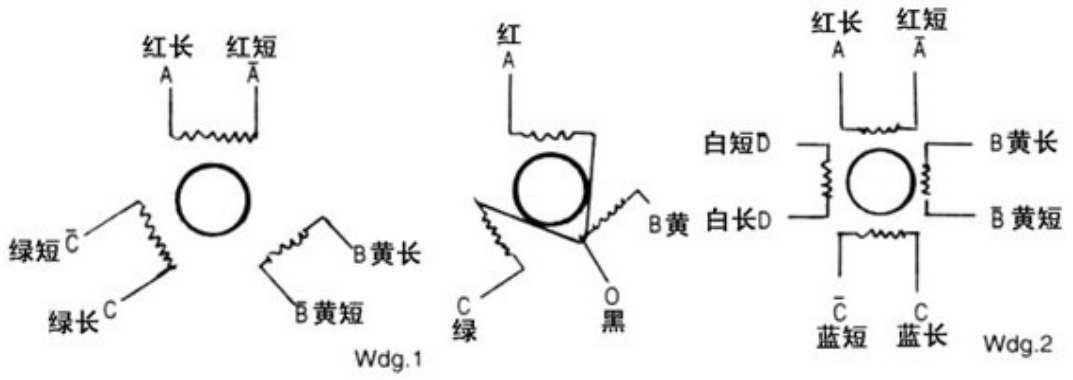

外型圖: Figure

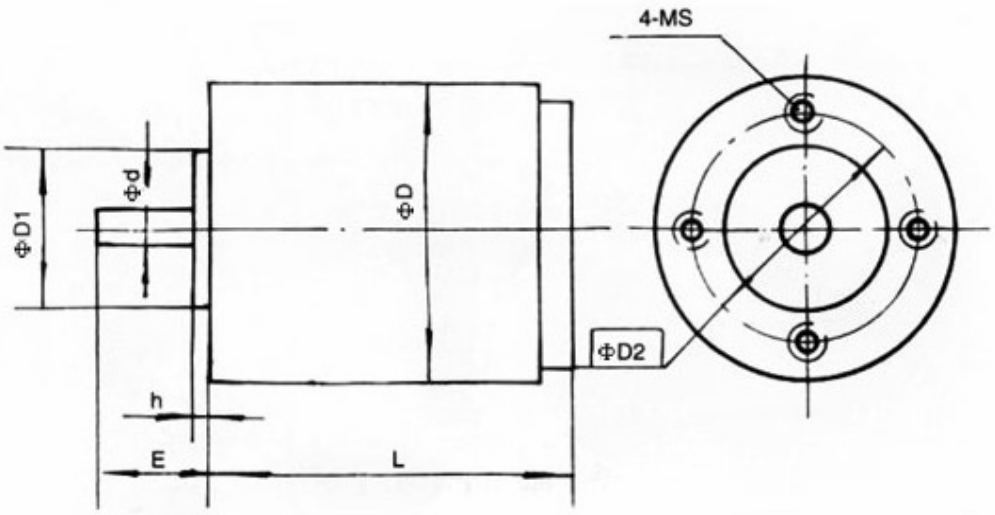

70, 75 BC/BF

Model	No.of Phase	Step Angle	Voltage	Current	Holding Torque
		(Deg.)	（V）	(A/phase)	Nm(kg.cm)
R70BF001	5	1.5/3	60	3.5	0.392(4)
R70BF003	3	1.5/3	27	3	0.784(8)
R70BF004	4	0.9/1.8	27	3	0.784(8)
R70BC340D	3	1.5/3	27	3	0.784(8)
R75BF001	3	1.5/3	24	3	0.392(4)
R75BF003	3	1.5/3	30	4	0.882(9)
R75BF004	3	1.5/3	80	5.8	0.49(5)
R75BC340	3	1.5/3	30	3	0.392(4)
R75BC340A	3	1.5/3	30	4	0.88(9)
R75BC380	3	0.75/1.5	30	3	0.98(10)
R75BC380A	3	0.75/1.5	30	3	0.68(7)

Model	No-load Pull-In Frequency	Pull-out Frequency	Wdg	Notes
	(Hz)	(Hz)		
R70BF001	4000	16000	3	
R70BF003	1600		1	
R70BF004	2100		2	
R70BC340D	1600		4	Spaceflight insert
R75BF001	1750		1	For double-shaft extension
R75BF003	1250		1	
R75BF004	2500		1	
R75BC340	2000	16000	1	
R75BC340A	1900		1	
R75BC380	2000		1	
R75BC380A	2200		1	

Model	ΦD	$ΦD_1$	h	Φd	E	L	$ΦD_2$	MS
R70BF001	70	30 +0/-0.011	2.5	6 +0/0.012	23.5	87.5	45	4-M4
R70BF003	70	45 +0/-0.014	3	8 +0.013/0.028	25	63	54	4-M4
R70BF004	70	45 +0/-0.014	3	8 +0.013/0.028	25	63	54	4-M4
R70BC340D	70	45 +0/-0.017	3	8 +0.013/0.028	25	63	54	4-M4
R75BF001	5	31 +0/-0.017	2	6 +0.01/0.022	16	55	68	3-M4
R75BF003	75	31 +0/-0.017	2	8 +0.013/0.028	16	77	68	3-M4
R75BF004	75	31 +0/-0.017	2	6 +0.01/-0.022	25	72	68	3-M4
R75BC340	75	31 +0/-0.017	2	8 +0.013/0.028	25	61	68	3-M4
R75BF340A	75	31 +0/-0.017	2	8 +0.013/0.028	25	77	68	3-M4
R75BC380	75	31 +0/-0.017	2	8 +0.013/0.028	25	61	68	3-M4
R75BC380A	75	31 +0/-0.017	2	8 +0.013/0.028	25	53	68	3-M4

接綫圖： Wiring Diagram

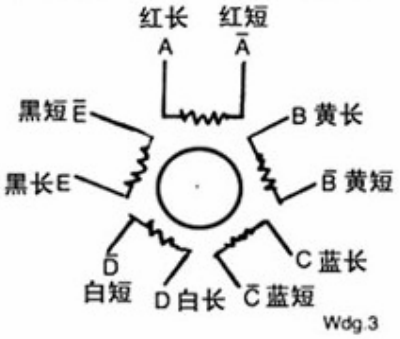

Wdg.3

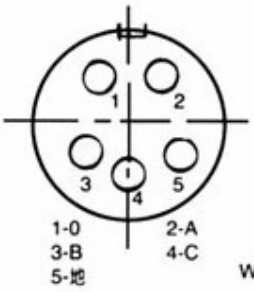

Wdg.4

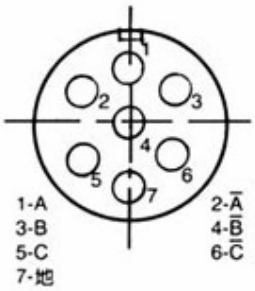

Wdg.5

外型圖： Figure

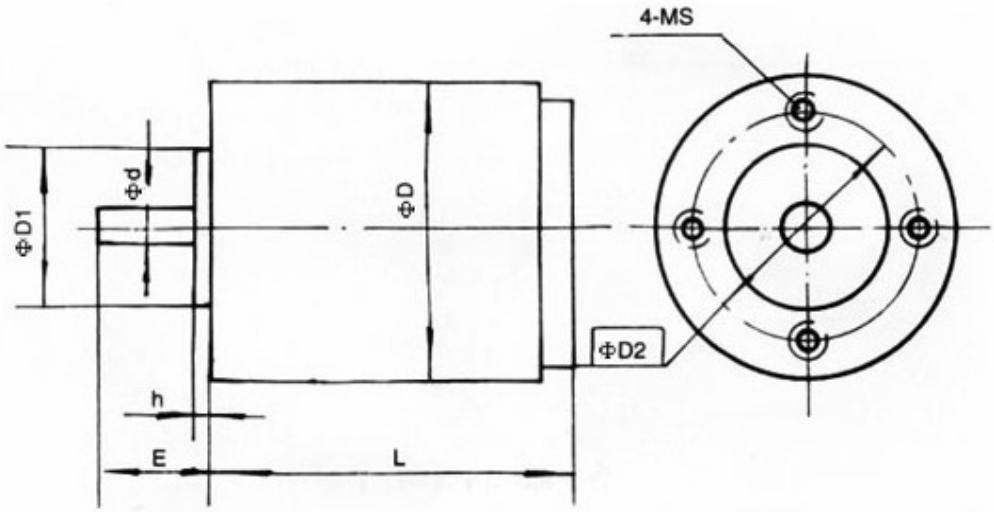

90, 110 BC/BF

Model	No.of Phase	Step Angle	Voltage	Current	Holding Torque
		(Deg.)	（V）	（A/phase）	Nm(kg.cm)
R90BF001	4	0.9/1.8	80	7	3.92(40)
R90BF002	5	0.75/1.5	80	7	3.92(40)
R90BF003	3	1.5/3	60	5	1.96(20)
R90BF004	5	0.75/3	60	7	2.45(25)
R90BF006	5	0.36/0.72	24	3	2.156(22)
R90BC340AH	3	1.5/3	60～110	5	1.5(14.7)
R90BC340BH	3	1.5/3	60～110	5	3.7(36.3)
R90BC340CH	3	1.5/3	60～110	5	5.5(53.9)
R110BF003	3	0.75/1.5	80	6	7.84(80)
R110BF003 new	3	0.75/1.5	80～330	6	7.84(80)
R110BF004	3	0.75/1.5	30	4	4.9(50)
R110BC380B	3	0.75/1.5	80～330	6	9.8(100)
R110BC380C	3	0.75/1.5	80～330	6	9.8(100)
R110BC380F	3	0.75/1.5	80～330	6	11.76(120)

Model	No-load Pull-In Frequency	Pull-out Frequency	Wdg	Notes
	(Hz)	(Hz)		
R90BF001	2000	8000	2	For double-shaft extension
R90BF002	3800	16000	3	Idem
R90BF003	1500	8000	1	Idem
R90BF004	4000	16000	3	
R90BF006	2400		3	Idem
R90BC340AH	1200	10000	6	Idem
R90BC340BH	1100	10000	6	Idem
R90BC340CH	1000	10000	6	Idem
R110BF003	1500	7000	1	Idem
R110BF003 new	1400	1500	5	Idem
R110BF004	500		1	Idem
R110BC380B	1350	1500	5	Idem
R110BC380C	1350	1500	5	Idem
R110BC380F	1200	1500	6	Idem

Model	ΦD(h_{12})	ΦD_1(h_7)	□b	E	L	h_1	h_2	Φd	ΦD_2	Φd_1	Key A
R90BF001	90	70	92	25	145	3	6	9 -0.011/0.027	107	6.6	Hemicycle3*10
R90BF002	90	70	92	25	145	3	6	9 -0.011/0.027	107	6.6	Hemicycle3*10
R90BF003	90	70	92	25	125	3	6	9 -0.011/0.027	107	6.6	Hemicycle3*10
R90BF004	90	70	92	25	118	3	6	9 -0.011/0.027	107	6.6	Hemicycle3*10
R90BF006	90	70	92	25	65	3	6	9 -0.011/0.027	107	6.6	Hemicycle3*10
R90BC340AH	90	70	90	27.5	120	2	6	12 -0.016/-0.027	107	6.6	Parallel key4*20
R90BC340BH	90	70	90	27.5	150	2	6	12 -0.011/0.027	107	6.6	Parallel key4*20
R90BC340CH	90	70	90	27.5	180	2	6	12 -0.016/-0.027	107	6.6	Parallel key4*20
R110BF003	110	85	112	27	156	4	8	11 -0.016/-0.034	132	9	Parallel key4*20
R110BF003 new	110	85	112	29	186	4	8	14 +0/-0.011	132	9	Parallel key4*20
R110BF004	110	85	112	27	111	4	8	11 -0.016/-0.034	132	9	Parallel key4*20
R110BC380B	110	85	112	66	206	4	8	14 +0/-0.011	132	9	Parallel key4*20
R110BC380C	110	85	112	35	206	4	8	14 +0/-0.011	132	9	Parallel key4*20
R110BC380F	110	85	112	35	226	4	8	14 +0/-0.011	132	9	Parallel key4*20

Figure & Wiring Diagram

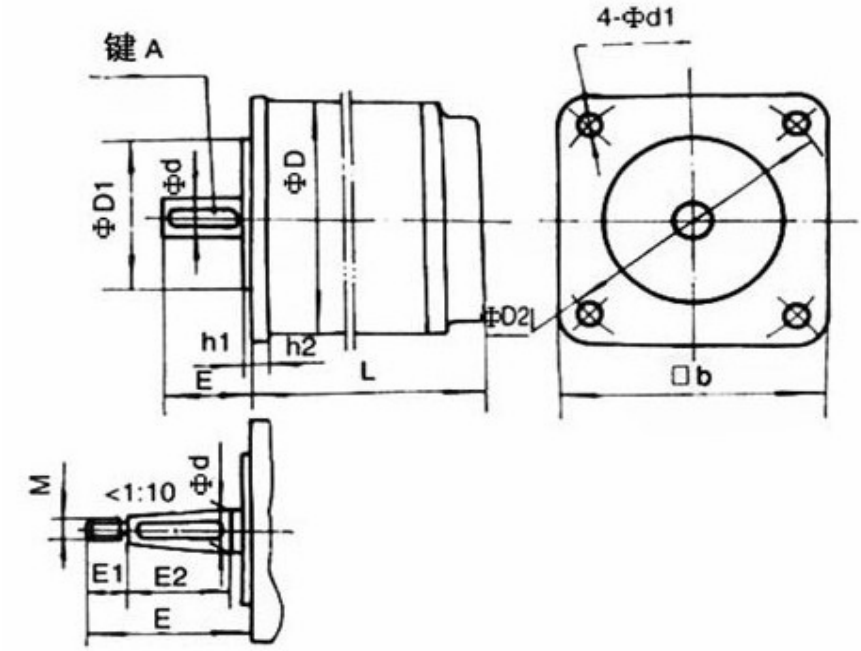

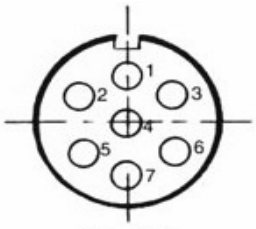

2-A 3-Ā
4-B 5-B̄
6-C 7-C̄
1-地

Wdg.6

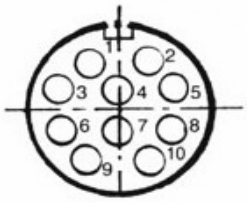

1-A 2-Ā
2-B 4-B̄
5-C 6-C̄
7-D 8-D̄
9-E 10-Ē

Wdg.7

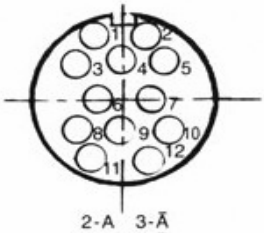

2-A 3-Ā
4-B 5-B̄
6-C 7-C̄
8-D 9-D̄
10-E 11-Ē
1-地 12-空

Wdg.8

130, 150, 160 BC/BF

Model	No.of Phase	Step Angle	Voltage	Current	Holding Torque
		(Deg.)	（V）	（A/phase）	Nm(kg.cm)
R130BF001	5	0.75/1.5	Dec-80	10	9.31(95)
R130BC3100	3	0.6/1.2	80～300	8	11.76(120)
R130BC3100A	3	0.6/1.2	80～300	10	19.6(200)
R130BC3100B	3	0.6/1.2	80～300	10	17.64(180)
R150BC548	5	0.75/1.5	80～150	13	15.68(160)
R160BC548	5	0.75/1.5	80～300	13	22
R160BC548A	5	0.75/1.5	80～300	13	30
R160BC380	3	0.75/1.5	80～300	13	22
R160BC380A	3	0.75/1.5	80～300	13	30

Model	No-load Pull-In Frequency	Pull-out Frequency	Wdg
	(Hz)	(Hz)	
R130BF001	3000	10600	3
R130BC3100	1450	15000	5
R130BC3100A	1300	15000	5
R130BC3100B	1300	15000	5
R150BC548	2600	12000	8
R160BC548	2000	12000	7
R160BC548A	1800	12000	7
R160BC380	1000	12000	6
R160BC380A	900	12000	6

Model	ΦD(h_{12})	ΦD_1(h_7)	□b	E	L	h_1	h_2	ΦD_2	Φd_1	Key A	E_1	E_2	M
R130BF001	130	100	134	37	165	5	10	155	11	Parallel key4*30			
R130BC3100	130	100	134	58	180	5	10	155	11	Parallel key6*30	12	36	12*1.25
R130BC3100A	130	100	134	58	240	5	10	155	11	Parallel key6*30	12	36	12*1.25
R130BC3100B	130	100	134	58	210	5	10	155	11	Parallel key6*30	12	36	12*1.25
R150BC548	150	100	150	47	199	5	10	170	11	Parallel key4*19	10	30	12*1.25
R160BC548	160	130	160	60	210	5	14	180	11	Parallel key6*30	14	36	12*1.25
R160BC548A	160	130	160	60	160	5	14	180	11	Parallel key6*30	14	36	12*1.25
R160BC380	160	130	160	60	210	5	14	180	11	Parallel key6*30	14	36	12*1.25
R160BC380A	160	130	160	60	260	5	14	180	11	Parallel key6*30	14	36	12*1.25
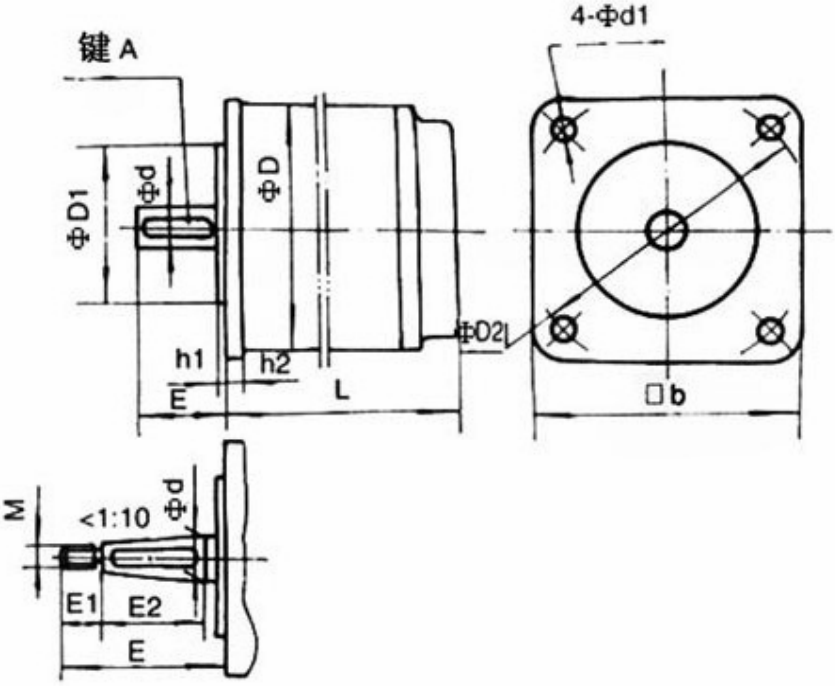
外型圖： Figure